HO CHI MINH CITY UNIVERSITY OF TECHNOLOGY AND ENGINEERING
FACULTY OF ADVANCED EDUCATION

DESIGN OF A CONTROL INTERFACE BOARD FOR THE CART-POLE SYSTEM

Supervisor: PhD. Võ Lâm Chương

Student: Nguyễn Huỳnh Khôi - ID: 22146024

Course: Project of Mechatronic System

Course ID: 251PRME315129E_07FIE

Semester: I – Academic year: 2025-2026

Ho Chi Minh City, January, 2026

ACKNOWLDGEMENTS

I would like to extend my deepest and most sincere gratitude to my supervisor, PhD. Võ Lâm Chương, for his profound guidance, unwavering support, and invaluable mentorship throughout the entire journey of this project. This research, centered on the design and implementation of a control interface board for the Cart-Pole system, presented numerous technical hurdles that would have been insurmountable without his expertise. While this is not my first experience in designing a Printed Circuit Board, this project involved the most detailed and complexity layout I have ever attempted. Under his supervision, I understand the important of the deep research before doing anything and a lot of precious things. The lessons learned during this process have provided me with priceless knowledge that will undoubtedly strengthen my professional path and serve as a cornerstone for my future career as an engineer.

I am also deeply appreciative of the Ho Chi Minh City University of Technology and Enginnering and the esteemed professors within the Faculty of Mechanical Engineering. The useful knowledge and robust skills I have acquired through years of lectures and practical training were essential in allowing me to successfully complete this Project in Mechatronics. I feel honored to have been part of a faculty that fosters such a high standard of excellence and innovation.

In the pursuit of engineering, I recognize that mistakes are often unavoidable, yet they serve as the most profound teachers. Throughout this project, I have exerted my maximum effort to apply the theoretical concepts I have learned to a physical, working model. This experience has humbled me and reinforced the realization that knowledge is infinite. I am fully aware of my current limitations and remain deeply committed to the philosophy of lifelong learning. Therefore, I sincerely hope to receive constructive criticism and feedback regarding this work. I welcome every critique as an opportunity to improve myself, refine my skills, and expand the boundaries of my limited knowledge. I am truly grateful for the opportunity to have conducted this research, and I look forward to applying the strengths I have gained here to make meaningful contributions to the field of engineering in the years to come.

FEEDBACK OF SUPERVISOR

.....

.....

.....

.....

.....

.....

.....

.....

.....

.....

.....

Ho Chi Minh City, January, 2026

Supervisor

TABLE OF CONTENTS

ACKNOWLDGEMENTS **0**

FEEDBACK OF SUPERVISOR **1**

TABLE OF CONTENTS **2**

CHAPTER I: INTRODUCTION **1**

1.1. Background and Motivation 1

1.2. Objectives of the Thesis 1

1.3. Scope and Limitation 2

1.4. Research Methodology 2

1.5. Thesis Structure 3

CHAPTER II: THEORETICAL BACKGROUND **4**

2.1. Mathematical Modeling of the Cart-Pole System 4

2.1.1. System Parameters and Coordinates 4

2.1.2. Energy Analysis 5

2.1.3. Euler-Lagrange Equations 5

2.1.4. Linearization 6

2.2. PID Control Theory 6

2.2.1. Individual Control Components 7

2.2.2. Impact on System Response 7

2.3. Cascaded PID Control Structure 8

2.3.1. The Necessity of Dual Control Loops 8

2.3.2. Operating Principle and Interaction 8

2.3.3. Sampling Frequency and Stability 9

2.4. Power Electronics and Motor Driving 9

2.4.1. H-Bridge and MOSFET Switching 9

2.4.2. Pulse Width Modulation (PWM) 10

2.4.3. DC-DC Conversion Principles 11
2.5.1. Quadrature Encoder Principles 12
2.5.2. Galvanic Isolation and Signal Conditioning 13
CHAPTER III: HARDWARE DESIGN 14
3.1. System Architecture 14
3.2. Power Management Unit 15
3.2.1. 12V DC for Gate Drivers (L7812) 15
3.2.2. High-Efficiency 5V Auxiliary Rail (TPS5430DDAR) 16
3.2.3. Isolated 3.3V Logic Supply (B0505S and AMS1117) 16
3.3. Motor Drive Stage 18
3.3.1. H-Bridge Topology and MOSFET Selection 18
3.3.2. IR2104 Gate Driving and Bootstrap Mechanism 19
3.4. Microcontroller and Sensing Interfaces 19
3.4.1. Central Microcontroller Unit (STM32F103C8T6) 20
3.4.2. Signal Isolation and Conditioning 20
3.5: Schematic Design & PCB Prototype 21
3.5.1. Schematic Design 22
3.5.1.1. Power Supply Circuit 22
3.5.1.2. Microcontroller and Signal Conditioning 23
3.5.1.3. H-Bridge Stage 25
3.5.1.4. Optocoupler and Connector Interface 25
3.5.2: PCB Layout Design 26
CHAPTER IV: SOFTWARE DEVELOPMENT 30
4.1. Control Flowchart 30
4.2. STM32 Peripheral Configuration 30
4.2.1. Timer Encoder Mode 30
4.2.2. Timer PWM Generation 31

4.2.3. Timer Interrupt (10ms Periodic Task) 32
4.3. Controller Programming 33
CHAPTER V: RESULTS AND EVALUATION 34
5.1. Hardware Assembly and Power-on Self-Test 34
5.2. Individual Functional Verification 34
5.3. Technical Challenges and Failure Analysis 35
5.3.1. Incident Description 35
5.3.2. Root Cause Analysis 36
CHAPTER VI: CONCLUSION 37
6.1. Conclusion 37
6.2. Future Work 37
CITIATION 38

LIST OF FIGURES

Figure 1.1: Diagram of inverted pendulum on a cart 4
Figure 2.1: PID Block Diagram 6
Figure 2.2: Cascade PID System 8
Figure 2.3: Typical MOSFET H-Bridge configuration 10
Figure 2.4: PWM & Duty Cycle 10
Figure 2.5: Linear Voltage Regulator 11
Figure 2.6: Buck Converter 12
Figure 2.7: Quadrature Encoder principle 13
Figure 2.8: Inside of Optocoupler 13
Figure 3.1: Hardware Architecture for Cart Pole System 14
Figure 3.2: LM7812 Diagram 15
Figure 3.3: TPS5430DDAR schematic diagram 16
Figure 3.4: B0505S Isolation Bridge 17

Figure 3.5: AMS1117-3.3V 17

Figure 3.6: IRF3205S N-channel MOSFET.....18

Figure 3.7: IR2104 MOSFET Driver 19

Figure 3.7: STM32F103C8T6 Microcontroller.....20

Figure 3.8: 6N137 High Speed Optocoupler.....21

Figure 3.9: PC817 Optocoupler.....21

Figure 3.5: Full System Schematic.....22

Figure 3.5.1: Power Supply Diagram 23

Figure 3.5.2: Microcontroller Diagram 24

Figure 3.5.3: MOSFET H – Bridge with IR2104 MOSFET Driver Diagram 25

Figure 3.5.4: Optocouplers and Connectors Diagram 26

Figure 3.5.5: 3D Visualization of the Cart-Pole Control Board.....27

Figure 3.5.6: The physical layout of the control board, highlighted the strategic placement and the clear isolation barrier desgined to safeguard to MCU logic. 28

Figure 3.5.7: Back view of cooper traces and pads.....29

Figure 4.1:Flowchart of Control Program 30

Figure 4.2:TIM_2 Config for Encoder Mode.....31

Figure 4.3: TIM_3 Config for PWM Generation 31

Figure 4.4:TIM_4 for Interrupt.....32

Figure 5.1: PCB Control Interface Board for Cart Pole System 34

Figure 5.2: Root Cause Short Circuit 36

CHAPTER I: INTRODUCTION

1.1. Background and Motivation

The Cart-Pole system, also known as the Inverted Pendulum on a Cart, is one of the most fundamental and classic problems in control theory and robotics. It serves as a benchmark for testing various control strategies due to its specific characteristics: it is highly non-linear, unstable and under-actuated. The challenge of balancing a pole vertically by moving a cart horizontally mimics real-world applications such as the stabilization of space booster rockets during takeoff, the balance of humanoid robots, and the operation of self-balancing personal transporters like Segways. However, transitioning from theoretical simulations to physical hardware presents several engineering challenges. Generic development boards (such as STM32 Blue Pill or Arduino UNO) often lack the specialized interfaces for electrical isolation, power management, signal integrity and interfacing. Therefore, designing a dedicated control interface board is essential to ensure system stability, safety, and performance. This project not only serves as a practical academic exercise but also provides a foundation for mastering real-time embedded control and high-performance electronic design.

1.2. Objectives of the Thesis

The primary objective of this project is to design and manufacture a high-performance control interface board based on the STM32 microcontroller, focusing on high-power efficiency and signal integrity. Specifically, the board features a custom H-Bridge MOSFET driver capable of handling a maximum power output of 150W for robust DC motor control. The power management system is designed to accept a 24V DC input and provide multiple regulated voltage levels, including 12V for gate driving and 5V/3.3V for logic and supply for microcontroller. For feedback accuracy and system protection, the board integrates high speed – optocoupler isolated for encoder interfaces and PWM outputs to prevent electromagnetic interference and back-EMF from affecting the microcontroller. Furthermore, it intergrated standard communication protocols such as I2C for peripheral sensor and USART for data logging and debugging, while utilizing high-frequency PWM outputs for smooth and precise motor actuation.

1.3. Scope and Limitation

This project focuses on the design and implementation of a custom-built hardware control system specifically for a linear Cart-Pole system, utilizing the STM32 microcontroller as the primary processing unit. The hardware scope is confined to the development of a dedicated Printed Circuit Board (PCB) that integrates a MOSFET-based H-Bridge driver with a power rating of 150W, although the design considerations allow for higher peaks provided if thermal management is maintained. The system is designed around a primary 24V DC input, employing a multi-stage regulation strategy to balance efficiency and signal stability. A linear regulator is utilized to step down 24V to a 12V rail dedicated to the MOSFET gate drivers; a linear topology is chosen here due to the low current demand of gate driving, which minimizes circuit complexity. In contrast, to the voltage differential between the 24V input and the 5V logic level, a high-efficiency buck converter is implemented. This switching regulator minimizes thermal dissipation while providing a robust 5V supply for power-intensive peripherals, including the quadrature encoders and communication interfaces such as I2C and USART. Finally, the 5V rail is further regulated down to 3.3V to ensure a stable and low-noise operating voltage for the STM32 microcontroller's core logic. From a control perspective, the project implements a Cascaded PID algorithm tailored to the linearized dynamics of the pendulum near its vertical equilibrium, excluding advanced non-linear or heuristic control methods.

1.4. Research Methodology

This project follows a structured engineering approach consisting of four key phases: Fristly is Theoretical Modeling by analyzing system dynamics to establish a linearized mathematical model for PID control design. Next is Hardware Engineering by designing a high-power PCB that integrates an STM32 Microcontroller, a 150W MOSFET H-Bridge, and isolated sensor interfaces with a multi-stage power management system. After that, Software Development by implementing real-time C-based algorithms on the STM32 platform, leveraging hardware timers for precise PWM generation and encoder decoding. Finally Experimental Validation by Conducting physical tests to evaluate system stability and iteratively tuning PID parameters for optimal balancing performance.

1.5. Thesis Structure

- Chapter 1: Introduction - Presents the background, research motivation, technical objectives, and the overall methodology of the project.
- Chapter 2: Theoretical Background - Discusses the mathematical modeling of the Cart-Pole system through physics-based equations and explores the theoretical principles of Cascaded PID control.
- Chapter 3: Hardware Design - Details the design of the control interface board, including component selection for the 150W MOSFET H-Bridge, the multi-stage power system, and the PCB layout strategies for signal integrity and thermal management.
- Chapter 4: Software Development - Describes the software architecture on the STM32 platform, focusing on real-time interrupt handling, hardware-level encoder decoding, and the implementation of the control algorithms in C language.
- Chapter 5: Results And Evaluation - Details the testing procedures, PID tuning process, and system performance analysis through real-time data graphs. This chapter also evaluates the hardware's thermal stability and power handling capabilities under operational loads.
- Chapter 6: Conclusion – Summarizes the project's outcomes in relation to the initial objectives, acknowledges technical limitations encountered during development, and proposes directions for future enhancements and research.

CHAPTER II: THEORETICAL BACKGROUND

2.1. Mathematical Modeling of the Cart-Pole System

The foundation of any control system is an accurate mathematical representation of the physical plant. For the Cart-Pole system, modeling allows us to predict how the cart's horizontal movement affects the pole's vertical stability. At the undergraduate level, the Euler-Lagrange method is the most structured approach to deriving these equations, as it focuses on the energy states of the system rather than complex vector force diagrams.

2.1.1. System Parameters and Coordinates

To begin the analysis, we define the following physical constants and variables:

- M: Mass of the cart.
- m: Mass of the pole.
- l: Length from the pivot to the pole's center of mass.
- I: Moment of inertia of the pole ($I = \frac{1}{3}ml^2$ for a uniform rod).
- g: Acceleration due to gravity (9.81 m/s^2).
- F: Force applied to the cart (the control input).
- x: Horizontal position of the cart.
- θ: Angle of the pole relative to the vertical (upright) position.

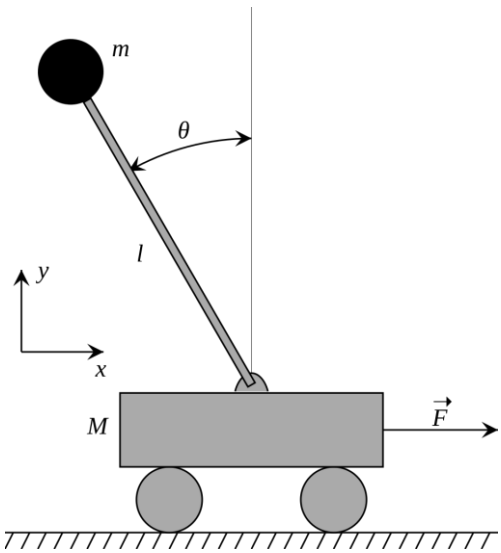

Figure 1.1: Diagram of inverted pendulum on a cart

The coordinates of the pole's center of mass (x_p, y_p) are expressed as:

$$x_p = x + \ lsin\theta$$

$$y_p = lcos\theta$$

2.1.2. Energy Analysis

The Lagrangian L is defined as the difference between the Total Kinetic Energy (K) and the Total Potential Energy (V). Total Kinetic Energy is the energy consists of the cart's translation and the pole's translation/rotation:

$$K = \frac{1}{2}M\dot{x}^2 + \frac{1}{2}m\left(\dot{x_p}^2 + \dot{y_p}^2\right) + \frac{1}{2}I\dot{\theta}^2$$

By differentiating the coordinates (x_p, y_p) and substituting them into the equation, we obtain:

$$K = \frac{1}{2}(M + m)\dot{x}^2 + ml\dot{x}\dot{\theta}cos\theta + \frac{1}{2}(I + ml^2)\dot{\theta}^2$$

Total Potential Energy: Assuming the ground level as the zero-potential reference:

$$V = mglcos\theta$$

2.1.3. Euler-Lagrange Equations

The equations of motion are derived using the Euler-Lagrange formula for each generalized coordinate q_i (where $q_1 = x$ and $q_2 = \theta$):

$$\frac{d}{dt}\left(\frac{\partial L}{\partial \dot{q}_i}\right) - \frac{\partial L}{\partial q_i} = Q_i$$

Applying this to the system (where $Q_x = F$ and $Q_\theta = 0$) results in two coupled, non-linear differential equations:

$$(M + m)\ddot{x} + ml\ddot{\theta}cos\theta - ml\dot{\theta}^2sin\theta = F$$

$$(I + ml^2)\ddot{\theta} + ml\ddot{x}cos\theta - mglsin\theta = 0$$

2.1.4. Linearization

Because standard PID controllers are linear, we must linearize the system around the unstable equilibrium point (upright position, $\theta \approx 0$). For small angles, we can assume:

- $sin\theta \approx 0$
- $cos\theta \approx 1$
- $\dot{\theta}^2 \approx 0$ (negligible higher-order terms)

The linearized equations of motion become:

$$(M + m)\ddot{x} + ml\ddot{\theta} = F$$

$$(I + ml^2)\ddot{\theta} + ml\ddot{x} = mgl\theta$$

These equations represent the "transfer function" that controller board will eventually control through the PID algorithm.

2.2. PID Control Theory

The PID controller operates by continuously calculating an "error" value as the difference between a desired setpoint and a measured process variable. For the Cart-Pole system, this error represents how far the pole is from the vertical position or how far the cart is from its target on the track.

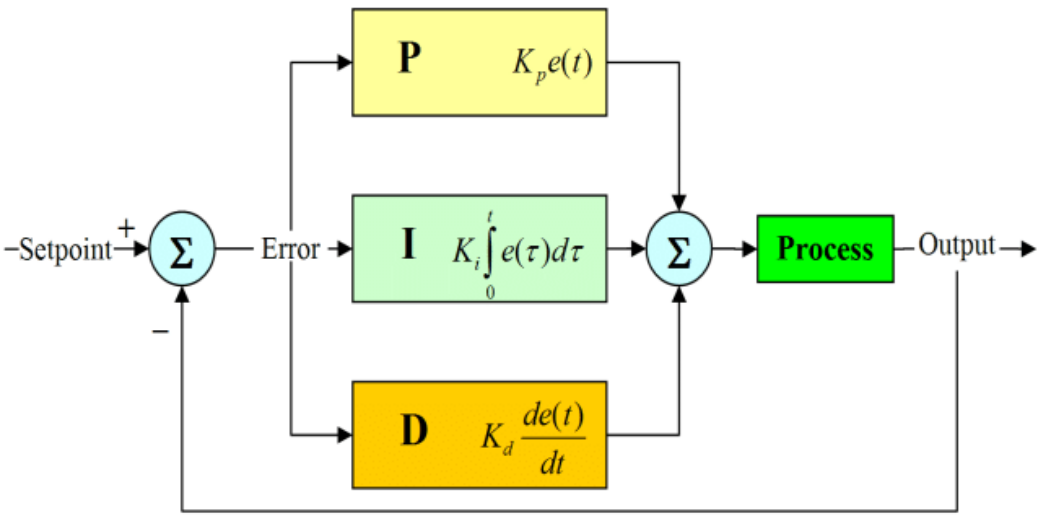

Figure 2.1: PID Block Diagram

2.2.1. Individual Control Components

The standard continuous-time PID control law is defined by the following equation:

$$u(t) = K_p e(t) + K_i \int_0^t e(\tau) d\tau + K_d \frac{de(t)}{dt}$$

Where:

- $u(t)$: The control output
- $e(t)$: The error signal, calculated as Setpoint – Measured Value
- K_p (Proportional Gain): Provides a control output that is directly proportional to the current error. In the Cart-Pole system, a higher K_p makes the motor react more aggressively as the pole tilts. However, if K_p is too high, the system will overshoot the setpoint and oscillate.
- K_i (Integral Gain): Accounts for the accumulation of past errors. If the error persists over time, the integral term increases the control effort to eliminate the offset.
- K_d (Derivative Gain): Estimates the future trend of the error based on its current rate of change. It acts as a "damper" or a brake. If the pole is falling rapidly, the derivative term anticipates the impact and applies a counter-force to slow down the motion before it reaches the setpoint. This is critical for the Cart-Pole system to prevent the violent oscillations caused by the K_p and K_i terms.

2.2.2. Impact on System Response

When tuning term K_p,K_i or K_d the interaction between these terms determines the stability of the cart. The following table summarizes the general effects of increasing each parameter on the system's step response:

Parameter	Rise Time	Overshoot	Settling Time	Steady-State Error
Increasing K_p	Decrease	Increase	Small Change	Decrease
Increasing K_i	Decrease	Increase	Increase	Eliminate
Increasing K_d	Small Change	Decrease	Decrease	No Change

2.3. Cascaded PID Control Structure

The Cart-Pole system is a classic example of an under-actuated system, meaning it possesses more degrees of freedom (horizontal position x and pole angle θ) than available control inputs (a single DC motor force F). A standard single-loop PID controller is insufficient for this task because stabilizing the angle often causes the cart to drift uncontrollably, eventually hitting the track limits. To resolve this, a Cascaded PID Control architecture is employed.

2.3.1. The Necessity of Dual Control Loops

In a cascaded configuration, the control task is divided into two distinct objectives that operate at different priorities and time scales are Inner Loop (Angle Control): This is the high-speed loop responsible for the primary task of balancing the pole vertically. Since the pole is inherently unstable, this loop must have a high sampling frequency to react to the slightest tilt. Next is Outer Loop (Position Control): This loop manages the cart's horizontal position on the track. Its role is to ensure the cart stays at the center or moves to a specific setpoint, preventing it from running off the track boundaries.

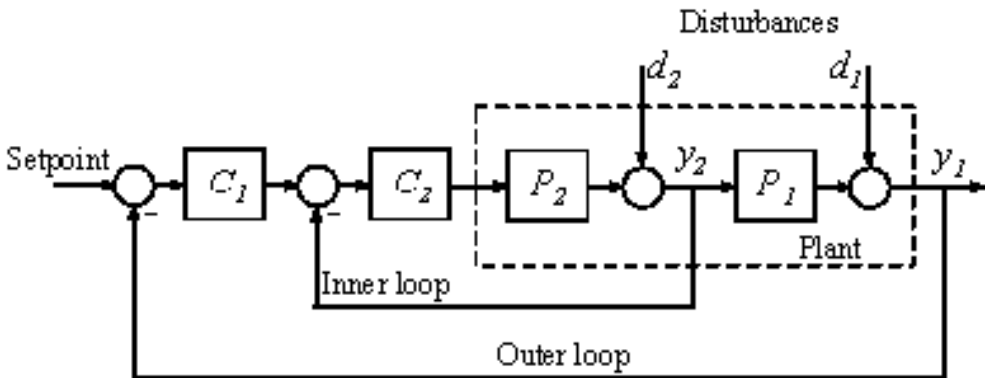

Figure 2.2: Cascade PID System

2.3.2. Operating Principle and Interaction

The fundamental logic of cascade control is that the Outer Loop provides the setpoint for the Inner Loop. Instead of the motor acting directly on the cart's position, the position controller tells the angle controller how much the pole should "lean" to achieve the desired movement. Position Regulation (Outer Loop): The controller calculates the error between the desired cart position (x_{ref}) and the actual position (x).

The output of this loop is not a voltage, but a target tilt angle (θ_{target}). To move the cart to the right, the controller commands the pole to tilt slightly to the right. Angle Stabilization (Inner Loop): The inner loop takes the θ_{target} from the outer loop and compares it with the current pole angle (θ). It then calculates the necessary PWM duty cycle for the motor to achieve that tilt. By trying to "catch" the falling pole, the motor effectively moves the cart in the direction of the tilt.

2.3.3. Sampling Frequency and Stability

For the cascaded system to remain stable, the Inner Loop must be significantly faster than the Outer Loop (typically 5 to 10 times faster) cause if the angle loop is too slow, the pole will fall before the position loop can even react. In this project, the STM32's hardware timers are configured to execute the Inner Loop at a high frequency (200Hz - 500Hz), while the Outer Loop can operate at a lower frequency (50Hz - 100Hz). This separation ensures that the stabilization of the pole is always prioritized over the positioning of the cart.

2.4. Power Electronics and Motor Driving

2.4.1. H-Bridge and MOSFET Switching

In the Cart-Pole system’s power stage, the MOSFET (Metal-Oxide - Semiconductor Field - Effect Transistor) functions as a high-speed electronic switch that alternates between cut-off and saturation regions to regulate power. When the Gate-Source voltage (V_{GS}) is significantly higher than the threshold voltage, the device enters the saturation region, exhibiting a minimal on-state resistance ($R_{DS(On)}$) which allows high current to pass from Drain to Source with very low thermal dissipation.

These MOSFETs are organized into an H-Bridge topology, consisting of four switches that allow the DC motor to be driven in two directions by alternating the current flow path. Specifically, turning on diagonal pairs allows for forward or reverse torque, which is essential for the rapid corrections required to balance the pendulum.

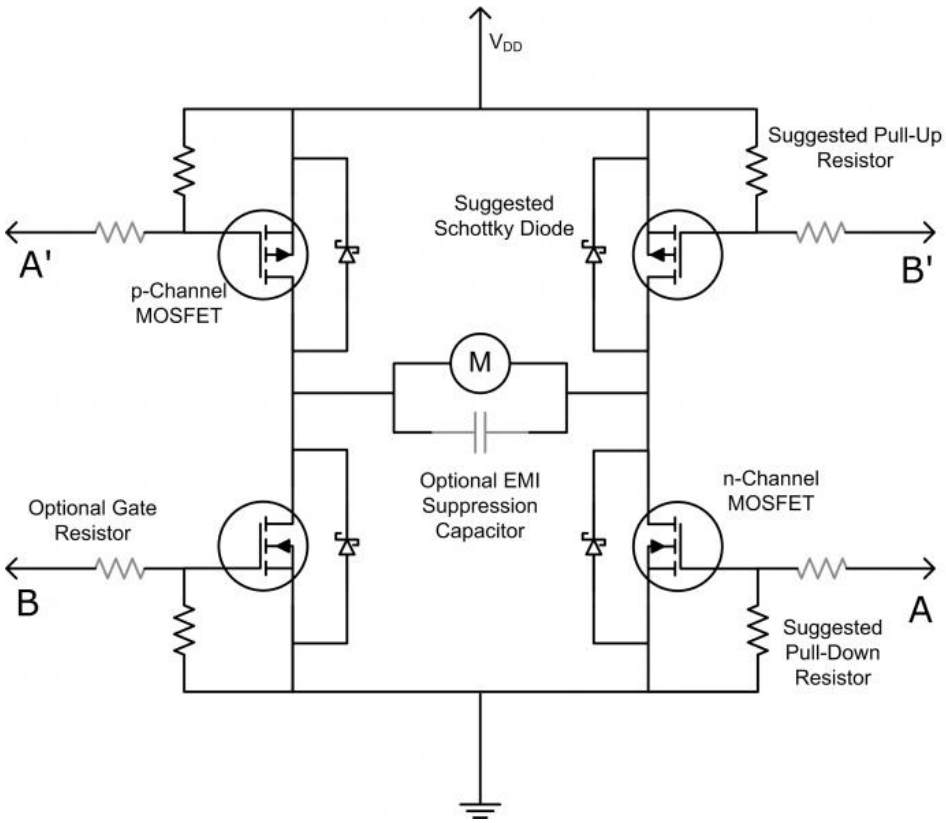

Figure 2.3: Typical MOSFET H-Bridge configuration

2.4.2. Pulse Width Modulation (PWM)

Pulse Width Modulation is a fundamental technique used to regulate the average voltage delivered to an electrical load by rapidly switching the power supply on and off. In the context of motor control, the speed and torque are determined by the duty cycle, which is the ratio of the "on" duration to the total period of one switching cycle. The average voltage (V_{avg}) applied to the motor is calculated as the product of the supply voltage (V_{cc}) and the duty cycle (D), expressed by the formula $V_{avg} = D \times V_{cc}$.

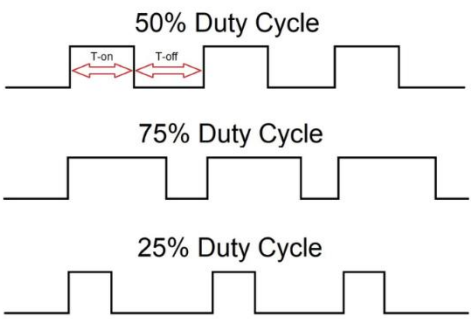

Figure 2.4: PWM & Duty Cycle

This method is highly efficient compared to linear voltage regulation because the switching elements ideally dissipate zero power when they are either fully on or fully off. For a dynamic system such as an inverted pendulum, a sufficiently high PWM frequency is essential to ensure that the current through the motor remains continuous and smooth, leveraging the motor's internal inductance to filter the high-frequency pulses. Maintaining a consistent switching frequency helps prevent mechanical jitter and audible noise while providing the granular control necessary for the precise, millisecond-level adjustments required to maintain the system's equilibrium.

2.4.3. DC-DC Conversion Principles

In electronic system design, DC-DC conversion is the process of transforming a source of direct current from one voltage level to another to meet the specific requirements of various circuit components. Linear regulation operates by using a pass element—typically a transistor—to drop the excess voltage, where the dissipated power is the product of the current and the voltage difference between the input and output ($P_{loss} = (V_{in} - V_{out}) \times I_{load}$). While linear regulators provide low-noise outputs and design simplicity, their efficiency decreases significantly as the voltage gap increases, leading to high thermal stress and the need for large heatsinks.

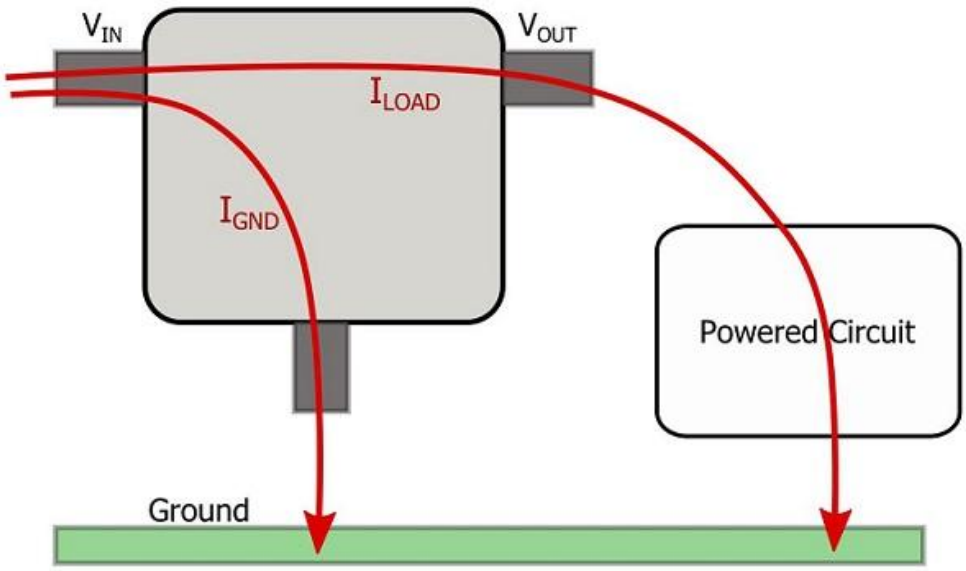

Figure 2.5: Linear Voltage Regulator

In contrast, a Buck converter, or step-down switching regulator, achieves much higher efficiency by using a switching element, an inductor, and a capacitor to store and release energy. By varying the duty cycle of the switch, the Buck converter delivers only the necessary energy to the load, theoretically eliminating the power loss associated with

dropping voltage through resistance. This switching topology is particularly essential for bridging large voltage gaps, such as reducing a 24V supply to a 5V logic level, where a linear regulator would waste over 75% of the input power as heat.

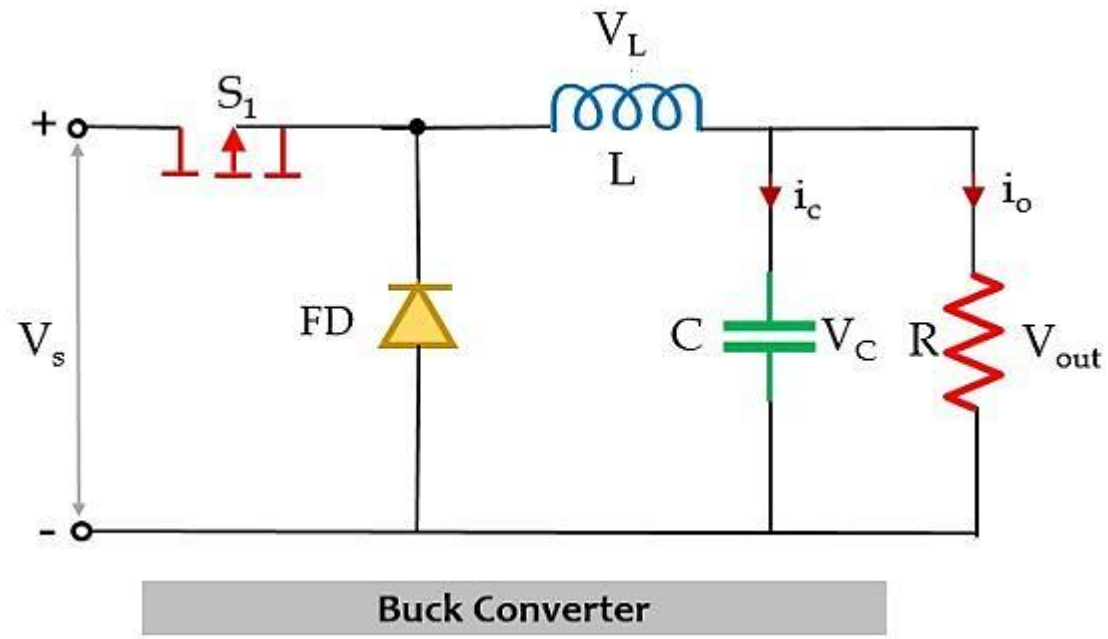

Figure 2.6: Buck Converter

Consequently, a hybrid approach using switching regulators for high-current, large-drop stages and linear regulators for low-current, noise-sensitive stages is often employed to optimize the system's overall power efficiency and thermal stability.

2.5. Sensing and Signal Conditioning

2.5.1. Quadrature Encoder Principles

A quadrature encoder is an incremental rotary sensor that provides high-resolution feedback on position and velocity by generating two square wave signals, Phase A and Phase B, which are electrically offset by 90 degrees. This phase shift, known as quadrature, allows the STM32 microcontroller to determine the direction of rotation by detecting which signal leads the other; for instance, Phase A leading Phase B indicates clockwise rotation, while Phase B leading Phase A indicates counter-clockwise movement. By utilizing hardware-level timer peripherals in Encoder Mode, the system can count every rising and falling edge of both channels, effectively quadrupling the pulses per revolution (4x encoding) to achieve the granular precision required for balancing the pendulum.

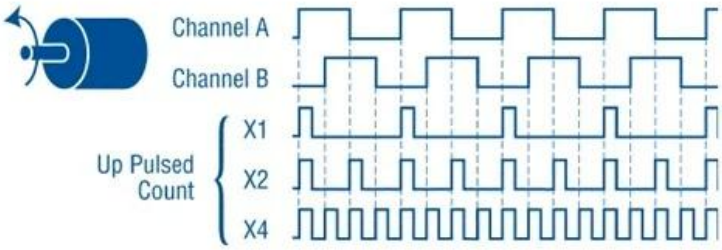

Figure 2.7: Quadrature Encoder principle

2.5.2. Galvanic Isolation and Signal Conditioning

Galvanic isolation is a design principle used to separate functional sections of electrical systems to prevent direct current conduction while still allowing for the exchange of signals or power. In high-power control boards, optocouplers are the primary components used to achieve this by converting electrical signals into light via an internal LED and back into electricity using a phototransistor.

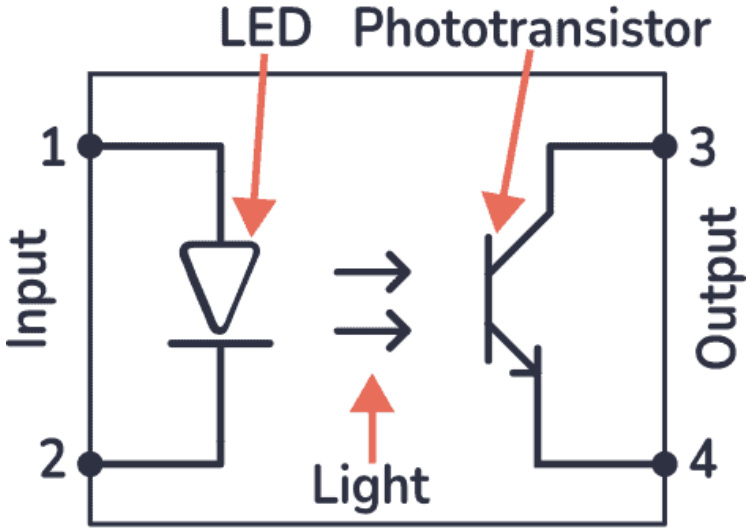

Figure 2.8: Inside of Optocoupler

This light-based transmission creates an insulation barrier that protects the sensitive 3.3V STM32 logic circuitry from high-voltage spikes, electromagnetic interference (EMI), and ground loops generated by the 24V motor power stage. Furthermore, signal conditioning circuits, such as RC low-pass filters and pull-up resistors, are integrated to debounce encoder signals and ensure that the digital inputs received by the MCU are clean and free from high-frequency switching noise, which is critical for the stability of the real-time PID control algorithm.

CHAPTER III: HARDWARE DESIGN

3.1. System Architecture

The overall hardware architecture and the interconnections between the control, power, and sensing modules are illustrated in Figure 3.1 below.

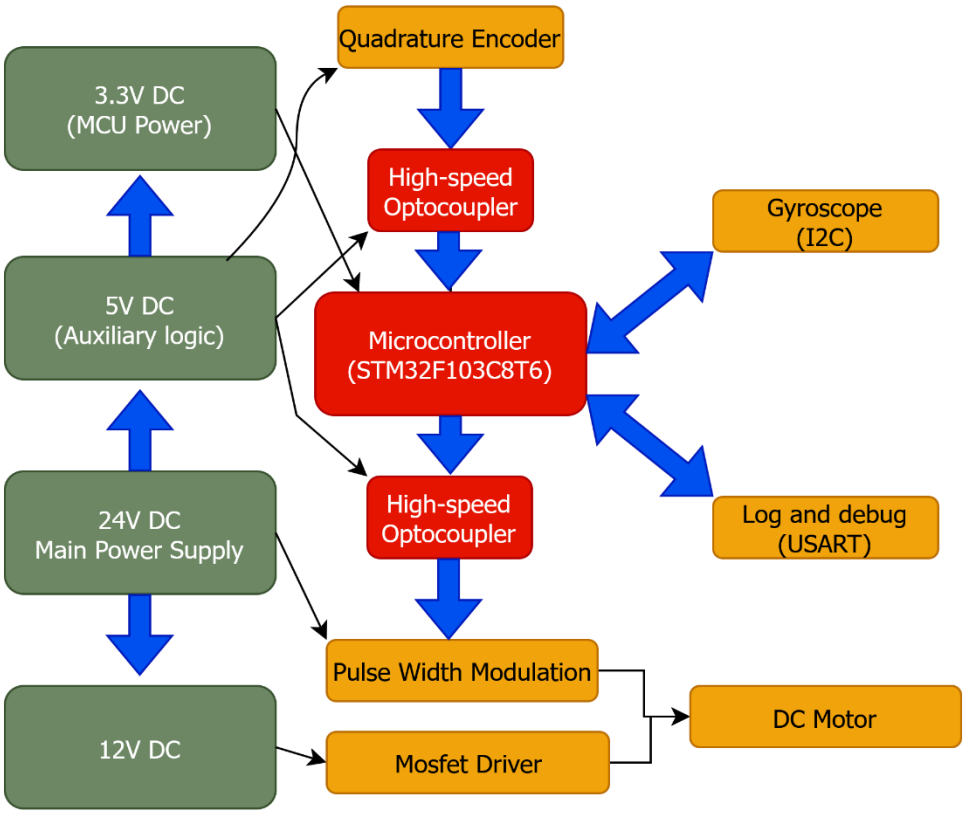

Figure 3.1: Hardware Architecture for Cart Pole System

The system is designed as a multi-stage control and power distribution network centered around the STM32F103C8T6 microcontroller. The power sub-system originates from a 24V DC Main Power Supply, which is regulated down to a 12V DC rail for the Mosfet Driver, a 5V DC rail for auxiliary logic, and a stabilized 3.3V DC rail dedicated to the MCU's core operations. To ensure high signal integrity and protect the sensitive 3.3V logic from high-voltage transients, the architecture incorporates high-speed optocouplers that provide galvanic isolation for both the incoming feedback from the Quadrature Encoder and the outgoing Pulse Width Modulation (PWM) control signals. In addition to encoder feedback, the system integrates a Gyroscope via the I2C protocol for orientation sensing and utilizes a USART interface for real-time logging and debugging purposes. The final actuation stage involves the isolated PWM signals

driving a Mosfet Driver—powered by the 12V rail—which manages the power delivery to the DC Motor, allowing for the rapid and precise torque adjustments necessary to stabilize the cart-pole system.

3.2. Power Management Unit

The power management system is a cornerstone of the control board, designed to ensure that each functional block receives a stable and noise-free voltage. Given the high-power nature of the 150W H-Bridge, the strategy focuses on hierarchical regulation and galvanic isolation to protect sensitive logic from inductive switching noise.

3.2.1. 12V DC for Gate Drivers (L7812)

The primary 24VDC input is regulated down to a 12VDC rail specifically for the MOSFET gate drivers using the L7812 linear regulator. The choice of a linear regulator for this stage is driven by its simplicity and the relatively low current requirement of the IR2104 drivers. A 12V supply is critical because it ensures the MOSFETs operate in the full saturation region, minimizing on-state resistance ($R_{DS(on)}$) and preventing overheating.

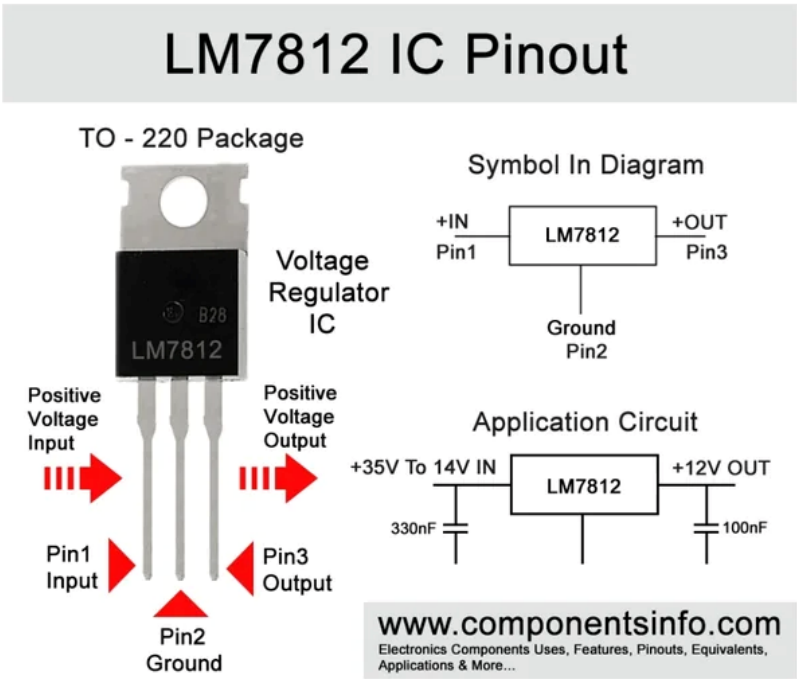

Figure 3.2: LM7812 Diagram

Although linear regulators are less efficient than switching converters, a linear regulator was selected for the 12V rail due to the minimal current requirements of the gate drivers. Since the drivers consume only a few milliamperes, the resulting thermal dissipation is negligible, making this approach more cost-effective and simpler to implement than a buck converter.

3.2.2. High-Efficiency 5V Auxiliary Rail (TPS5430DDAR)

To power the auxiliary logic and sensors, the 24VDC source is stepped down to 5VDC using the TPS5430DDAR Buck converter. A switching regulator was chosen for this stage over a linear alternative due to the significant voltage drop (24V to 5V). Using a linear regulator would result in a theoretical efficiency of only 20%, wasting the remaining 80% as heat. The TPS5430DDAR, operating at a high switching frequency, offers up to 90% efficiency and can provide up to 3A of current.

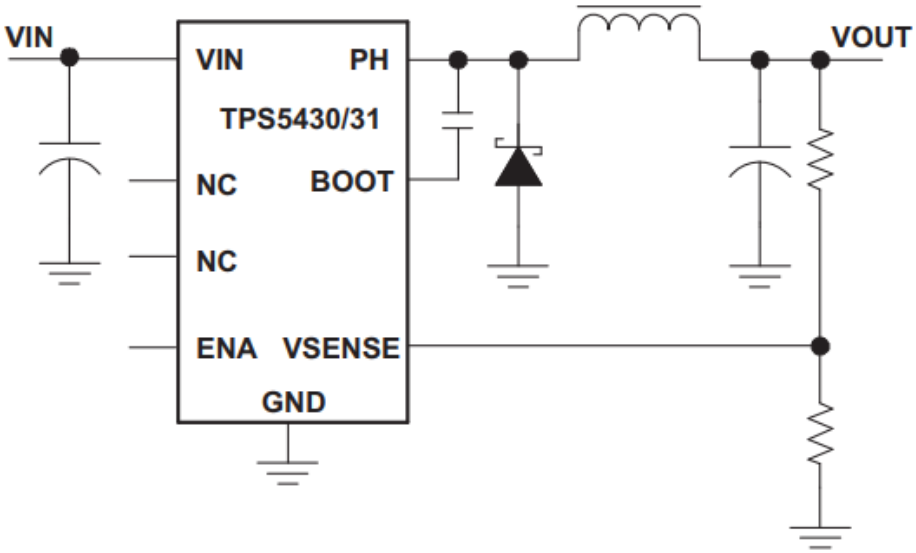

Figure 3.3: TPS5430DDAR schematic diagram

This ensures that the system can power multiple sensors and LEDs without the need for massive heatsinks, maintaining a compact PCB footprint and high thermal reliability.

3.2.3. Isolated 3.3V Logic Supply (B0505S and AMS1117)

The most sensitive part of the system, the STM32F103C8T6 microcontroller, requires an isolated and precision power source. This is achieved by passing the 5V auxiliary rail through a B0505S isolated DC-DC converter. The primary reason for this choice is to create "Galvanic Isolation" between the noisy power ground (used by the

motor) and the clean logic ground. This isolation prevents ground loops and inductive spikes from the H-Bridge from resetting or damaging the MCU.

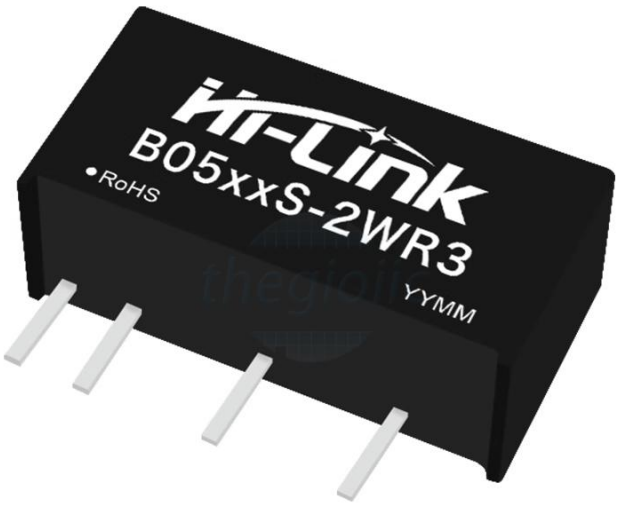

Figure 3.4: B0505S Isolation Bridge

The isolated 5V output is then fed into an AMS1117-3.3 Low-Dropout (LDO) regulator. The AMS1117 was selected for its ability to provide a very stable 3.3VDC output with minimal voltage ripple, which is crucial for the accuracy of the MCU's internal ADC and the stability of the real-time control algorithm.

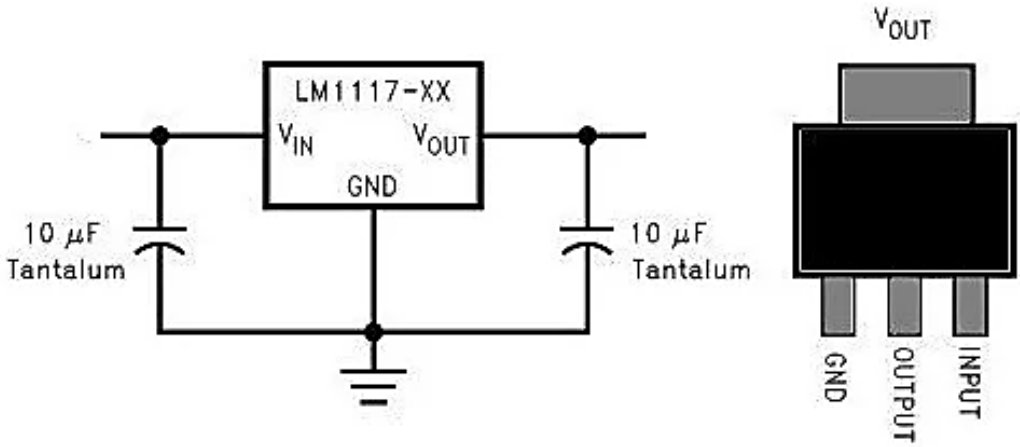

Figure 3.5: AMS1117-3.3V

3.3. Motor Drive Stage

The motor drive stage is the power-delivering heart of the system, responsible for converting low-level PWM signals from the STM32 into high-current drive signals for the 24V DC motor. This stage is designed to handle peak power loads of up to 150W while maintaining high switching efficiency and electrical robustness.

3.3.1. H-Bridge Topology and MOSFET Selection

The system utilizes a full H-bridge configuration consisting of four IRF3205S N-channel MOSFETs. These specific transistors were selected for their exceptionally low on-resistance ($R_{DS(on)}$ of approximately $8\,m\Omega$), which is critical for minimizing conduction losses and heat dissipation when driving currents up to 8-10A. By using N-channel MOSFETs for both the high-side and low-side switches, the design achieves better performance and cost-efficiency compared to P-channel alternatives, provided that a suitable gate driver is used to manage the high-side gate voltage.

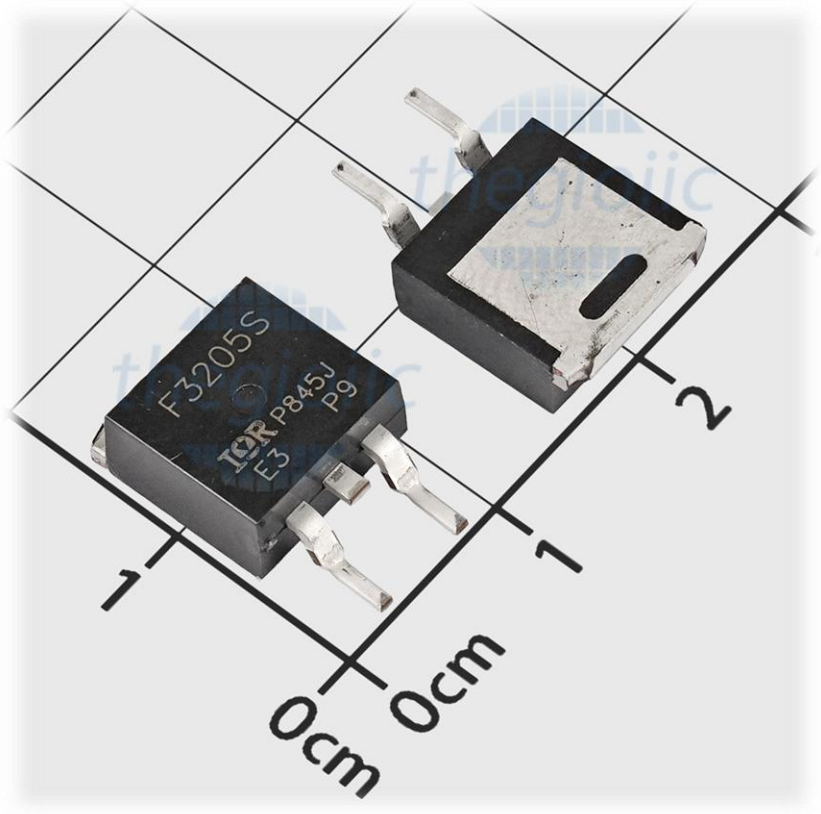

Figure 3.6: IRF3205S N-channel MOSFET

3.3.2. IR2104 Gate Driving and Bootstrap Mechanism

To interface the 3.3V logic of the STM32 with the 24V power stage, two IR2104 Half-Bridge Driver ICs are utilized to perform level-shifting, current amplification, and high-side gate driving. The IR2104 provides the necessary peak current to rapidly charge the non-linear gate capacitance of the IRF3205S MOSFETs, ensuring clean and efficient transitions. A vital safety feature of this driver is the integrated dead-time logic, which introduces a 520ns delay to prevent "shoot-through"—a condition where both the high-side and low-side MOSFETs are active simultaneously, causing a catastrophic short circuit. Because the system uses N-channel MOSFETs for the high-side, the gate voltage must be maintained at approximately 12V higher than the source voltage ($V_{source} + 12V$) to remain fully saturated. This is achieved through a bootstrap circuit consisting of a high-speed diode and a reservoir capacitor. When the low-side MOSFET is active, the capacitor charges to 12V from the L7812 rail, when the high-side switch is required to turn on, the capacitor "floats" to provide the elevated potential needed to drive the high-side gate, eliminating the requirement for an additional isolated power supply for the high-side logic.

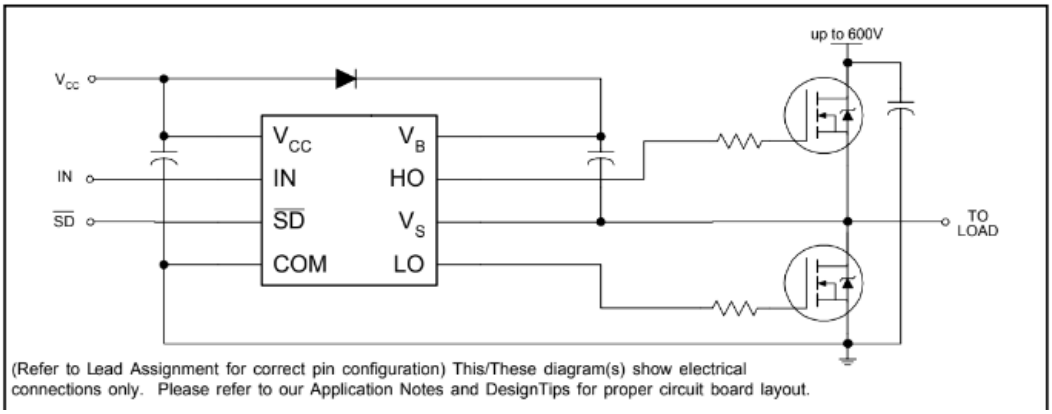

Figure 3.7: IR2104 MOSFET Driver

3.4. Microcontroller and Sensing Interfaces

The control intelligence and feedback acquisition of the Cart-Pole system are centered around the STM32 microcontroller, supported by an isolated sensing network to maintain high-speed real-time performance.

3.4.1. Central Microcontroller Unit (STM32F103C8T6)

The STM32F103C8T6, based on the ARM Cortex-M3 core, serves as the system's "brain" due to its ability to operate at a 72MHz clock frequency, which is more than sufficient for executing complex cascaded PID algorithms within millisecond intervals. Key peripherals utilized in this design include Advanced-control Timers (TIM1) for generating high-frequency complementary PWM signals, General-purpose Timers configured in hardware Encoder Mode to track position without CPU overhead, and I2C/USART interfaces for sensor communication and debugging. The 3.3V logic level provides a low-power footprint while maintaining compatibility with modern digital sensors.

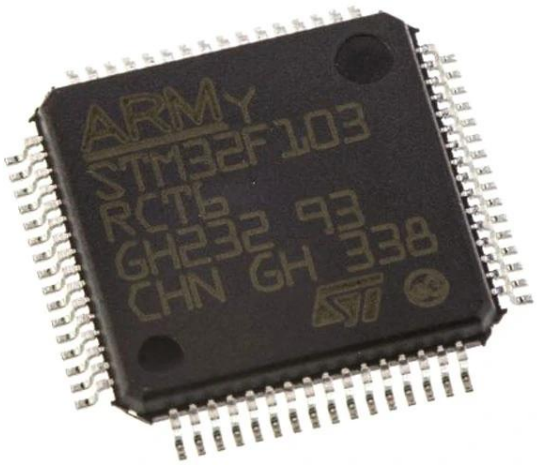

Figure 3.7: STM32F103C8T6 Microcontroller

3.4.2. Signal Isolation and Conditioning

Galvanic isolation is implemented to decouple the sensitive 3.3V STM32 logic from the high-power 24V motor stage, ensuring system stability and protecting the MCU from electromagnetic interference (EMI) and inductive voltage spikes. For time-critical data paths, specifically the high-frequency PWM output signals sent to the gate drivers and the rapid pulse input signals from the encoders, the system utilizes 6N137 high-speed optocouplers. The 6N137 is capable of handling data rates up to 10 Mbps, which is essential to prevent propagation delays or signal distortion that would otherwise introduce phase lag and instability into the real-time cascaded PID control loop.

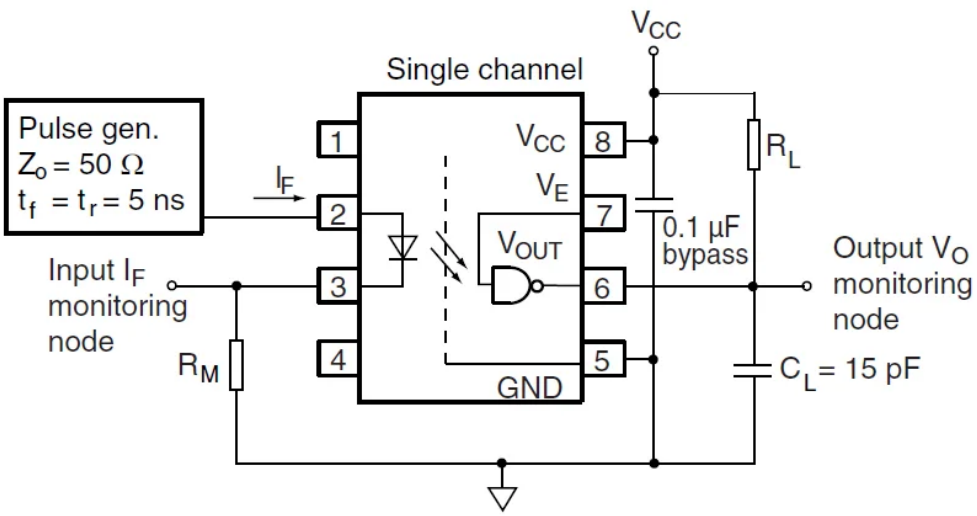

Figure 3.8: 6N137 High Speed Optocoupler

In contrast, for general logic signals and non-time-sensitive digital I/O, the PC817 standard optocoupler is employed. The PC817 provides a reliable and cost-effective isolation barrier for static or low-frequency signals where high-speed switching is not required. By segregating the signal paths in this manner, the control board achieves a robust balance between high-speed performance and economic design, effectively eliminating ground loops and safeguarding the STM32F103C8T6 from the harsh electrical environment of the 150W power stage.

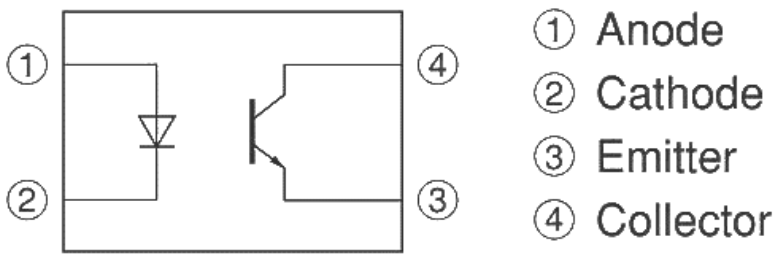

Figure 3.9: PC817 Optocoupler

3.5: Schematic Design & PCB Prototype

This section details the transition from theoretical component selection to the physical implementation of the control board. The design focuses on integrating the diverse voltage rails, high-speed signal paths, and high-power actuation components into a reliable and compact system.

3.5.1. Schematic Design

By integrating the previously selected components—including the STM32F103C8T6 microcontroller, the TPS5430 buck converter for high-efficiency power, and the IR2104 gate drivers—the schematic ensures that all modules communicate effectively while maintaining strict electrical boundaries. A primary focus of the layout is the implementation of the galvanic isolation strategy, where 6N137 and PC817 optocouplers are placed to bridge the logic and power domains without direct electrical contact. Following the design specifications and the hierarchical power strategy discussed in earlier sections, the complete schematic diagram is presented below:

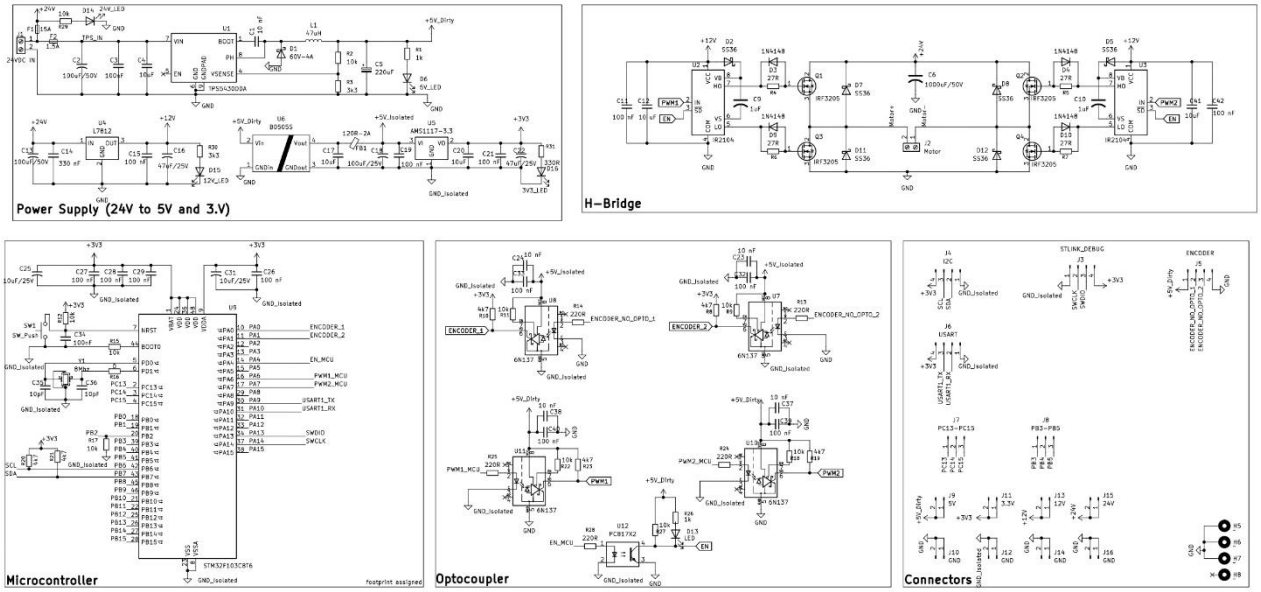

Figure 3.5: Full System Schematic

3.5.1.1. Power Supply Circuit

The power supply circuit is responsible for converting the 24VDC input into the various stable voltage rails required by the system's components. At the primary input, a fuse is integrated into the circuit to provide essential short-circuit protection, safeguarding the entire board and the 24V power source from catastrophic failure in the event of a component breakdown or accidental wiring error.

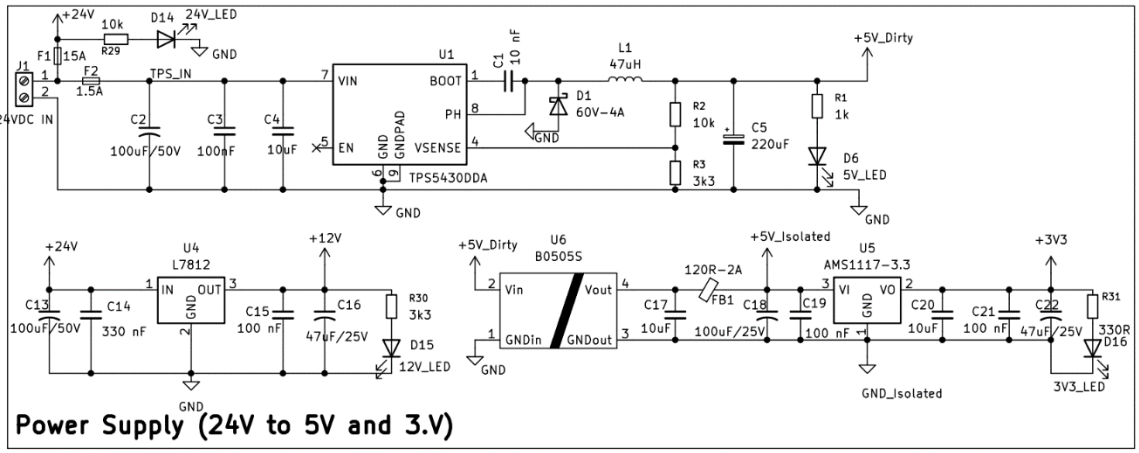

Figure 3.5.1: Power Supply Diagram

As shown in the schematic detail, the TPS5430 buck converter follows the protection stage, utilizing an inductor and high-quality filtering capacitors to deliver a high-efficiency 5V auxiliary rail. The L7812 linear regulator is implemented with specific decoupling capacitors to provide a steady 12V supply for the gate drivers. Finally, the combination of the B0505S isolated DC-DC converter and the AMS1117 regulator establishes a completely isolated 3.3V domain, ensuring the logic circuitry is shielded from the power stage's electrical noise.

3.5.1.2. Microcontroller and Signal Conditioning

The central control unit of the system is the STM32F103C8T6 microcontroller, which is surrounded by essential signal conditioning and support circuitry to ensure high-speed processing stability and signal integrity. As illustrated in the schematic, the design focuses on four critical areas: power stability, timing accuracy, communication reliability, and peripheral mapping. Power Stability and Noise Filtering To maintain a noise-free environment for the 3.3V logic core, a comprehensive decoupling capacitor network is implemented. The VDD and VDDA pins are equipped with 100nF ceramic capacitors (C27, C28, C29, and C26) placed in close proximity to each pin to filter high-frequency switching noise. Additionally, 10uF bulk capacitors (C25 and C31) are utilized to act as energy reservoirs, compensating for low-frequency voltage fluctuations. All logic components are referenced to a dedicated GND_Isolated plane, ensuring that the ground loops from the high-power motor stage do not interfere with the MCU’s operations.

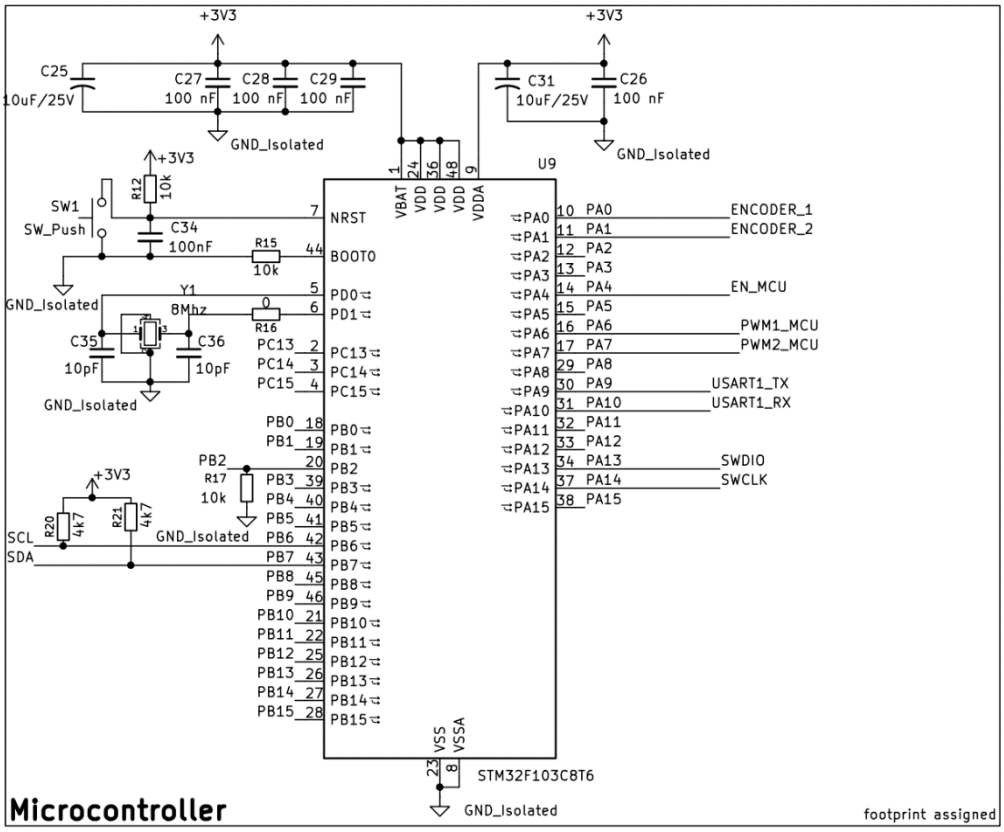

Figure 3.5.2: Microcontroller Diagram

Clock and Reset Circuitry For the precise timing required by the cascaded PID algorithm and encoder pulse counting, the system utilizes an external 8MHz crystal oscillator (Y1) connected to pins PD0 and PD1. This external source provides superior frequency stability compared to internal RC oscillators. Two 10pF load capacitors (C35 and C36) are paired with the crystal to ensure reliable oscillation startup. The system reset (NRST) is managed by an RC network consisting of a 10kΩ resistor (R12) and a 100nF capacitor (C34), which provides a clean power-on reset signal and allows for manual restarts via the button. Communication and Interface Configuration The sensing and debugging interfaces are configured to maximize the MCU's hardware peripheral efficiency as I2C Interface: The PB6 (SCL) and PB7 (SDA) pins are dedicated to the gyroscope. These lines are pulled high by 4.7kΩ resistors (R20 and R21), which are necessary to maintain the signal integrity of the I2C open-drain architecture. Encoder Inputs: PA0 and PA1 are mapped to the hardware timer’s encoder mode for high-resolution position tracking. PWM Outputs: PA6 and PA7 provide the control signals for the isolated gate drivers. System Enable: PA4 is used as a master enable signal to engage or disengage the motor drive stage. Debug and Programming: The USART1

(PA9 and PA10) pins are reserved for real-time data logging, while PA13 (SWDIO) and PA14 (SWCLK) facilitate Serial Wire Debugging (SWD) for firmware development.

3.5.1.3. H-Bridge Stage

The power stage is implemented as a full H-bridge configuration to provide bidirectional torque and PWM speed control for the 24V DC motor. This stage is optimized for 150W operation through the following design choices:

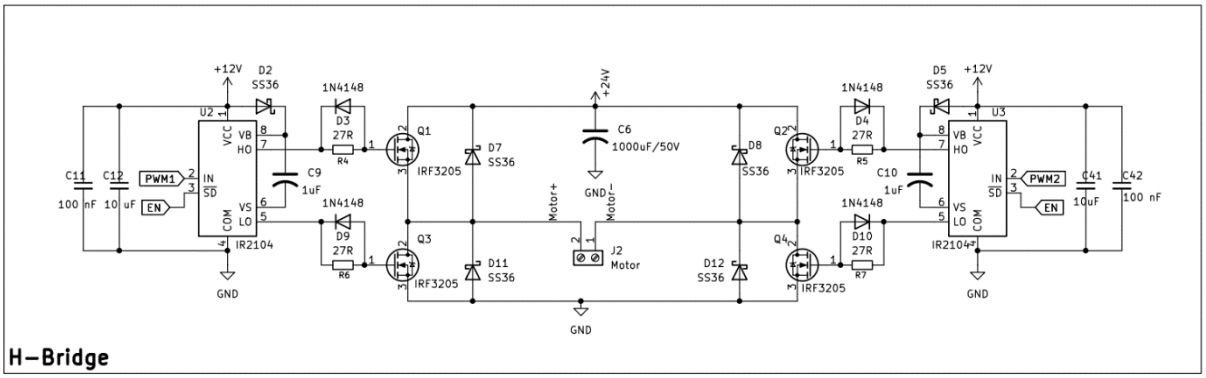

Figure 3.5.3: MOSFET H – Bridge with IR2104 MOSFET Driver Diagram

Four IRF3205 MOSFETs are utilized, chosen for their exceptionally low $R_{DS(on)}$ to minimize conduction losses and thermal dissipation during high-current demands. Two IR2104 drivers (U2, U3) manage the MOSFETs. A bootstrap mechanism, consisting of SS36 Schottky diodes (D2, D5) and 1uF capacitors (C9, C10), is employed to provide the floating voltage required to drive the high-side N-channel MOSFETs into full saturation. each MOSFET gate is interfaced with a 27 Ω resistor in parallel with a 1N4148 diode. This ensures controlled turn-on while providing a low-impedance path for rapid gate discharge, effectively preventing shoot-through. A 1000uF/50V electrolytic capacitor (C6) acts as a bulk reservoir to stabilize the supply rail, while four SS36 freewheeling diodes (D7, D8, D11, D12) suppress inductive back-EMF spikes generated by the motor during high-frequency switching.

3.5.1.4. Optocoupler and Connector Interface

This section details the physical implementation of the signal isolation and external connection points required for a modular and protected control system.

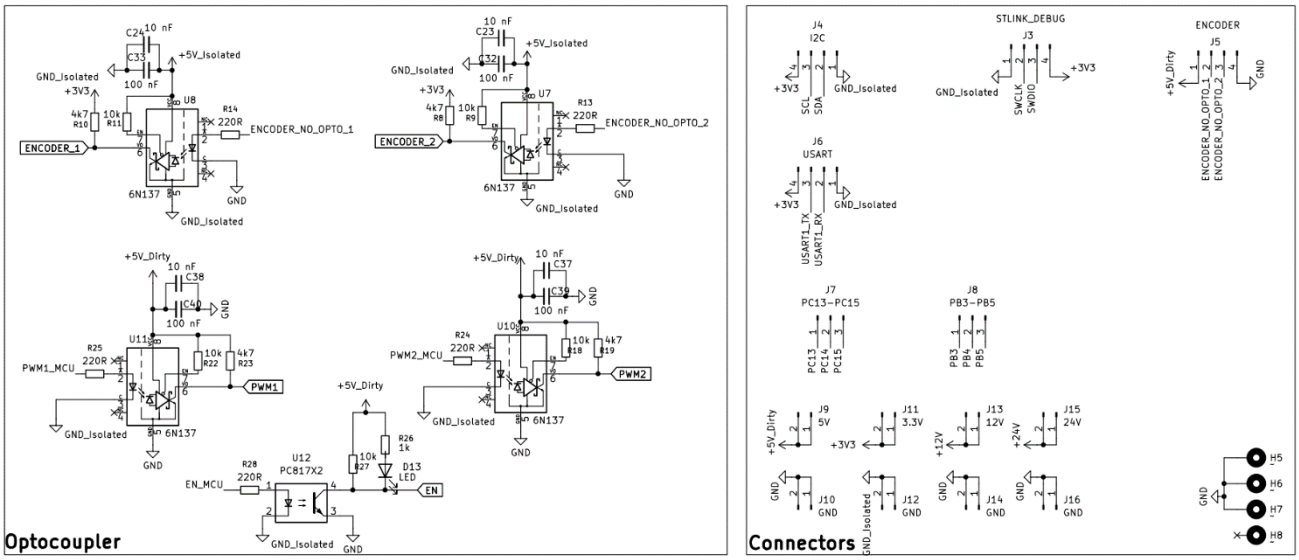

Figure 3.5.4: Optocouplers and Connectors Diagram

Optocoupler Isolation Circuitry As previously established in the architecture, the board utilizes two types of optoisolators to bridge the logic and power domains. The 6N137 high-speed optocouplers (U7, U8, U10, and U11) are dedicated to the PWM and Encoder signals. These paths include 220 Ω current-limiting resistors (R25, R24) and pull-up networks (R10, R11, etc.) to ensure sharp signal transitions at high frequencies. For the master Enable signal, a PC817 optocoupler (U12) is used. This sub-circuit includes a status LED (D13) to provide a visual indication when the motor drive stage is energized. Each optocoupler is decoupled with 100nF and 10nF capacitors to filter out transients from the switching power supply. System Connectors The schematic incorporates a comprehensive set of headers that serve as the physical interface for all external peripherals and power sources included I2C, SWD (Serial Wire Debug), USART, Encoder, addition GPIO Pin and power from 3.3V to 24V Pin out for necessary using.

3.5.2: PCB Layout Design

The transition from schematic to PCB layout is a critical phase, especially for power systems where electromagnetic interference (EMI) and thermal management dictate overall stability. The PCB for the Cart-Pole system is designed with a 2-layer architecture, focusing on the following key strategies:

Power and Logic Segregation: To prevent high-current switching noise from affecting the MCU, the board is strictly partitioned into a Power Zone (24V, 12V, H-Bridge) and a Clean Logic Zone (STM32, Sensors). These zones are physically separated by the isolation barrier of the optocouplers, ensuring that no ground loops interfere with the 3.3V logic. High-Current Trace Routing: For the 150W power requirement, the system handles a continuous current of approximately 6.25A. Traces for the H-Bridge and motor outputs are designed with a minimum width of 80-100 mil and reinforced with copper pours. Thermal vias are placed around the IRF3205S MOSFETs to conduct heat to the bottom layer, utilizing the PCB surface as a passive heatsink. Signal Integrity: High-speed signals, such as the 8MHz crystal traces and the 6N137 optocoupler outputs, are kept as short as possible. Decoupling capacitors (100nF) are placed immediately adjacent to the VCC pins of the STM32 and IR2104 ICs to suppress high-frequency transients. To minimize the cost and easy to handle, PCB size is selected to 100mm x 100mm. The 3D Visualization is below:

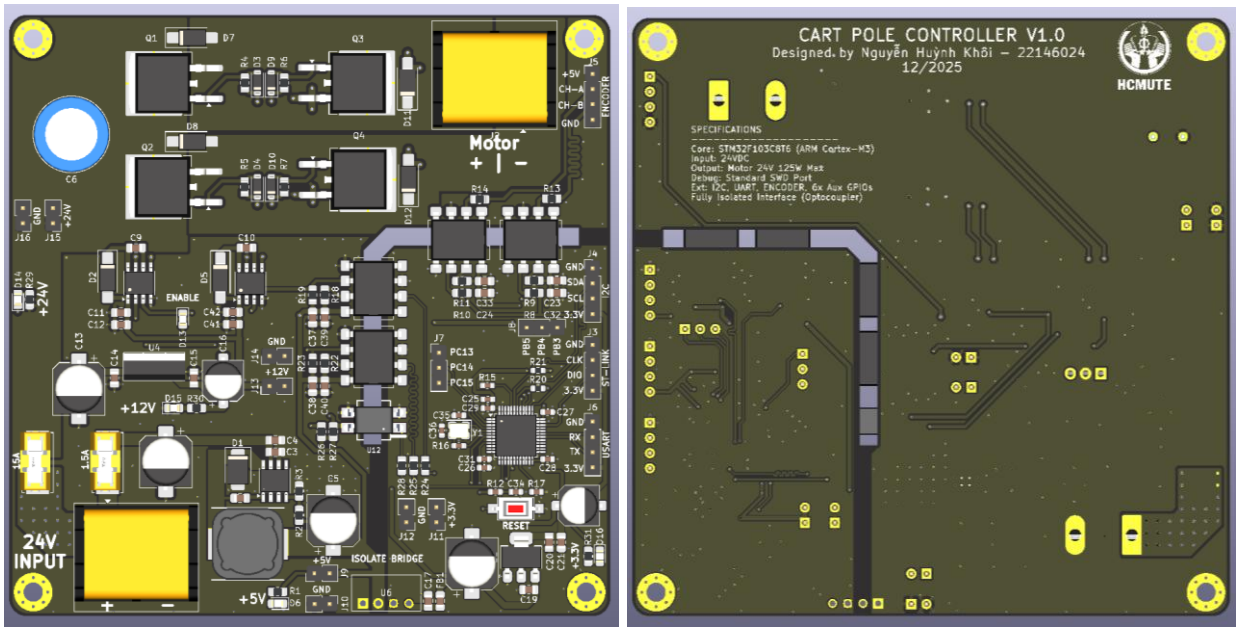

Figure 3.5.5: 3D Visualization of the Cart-Pole Control Board

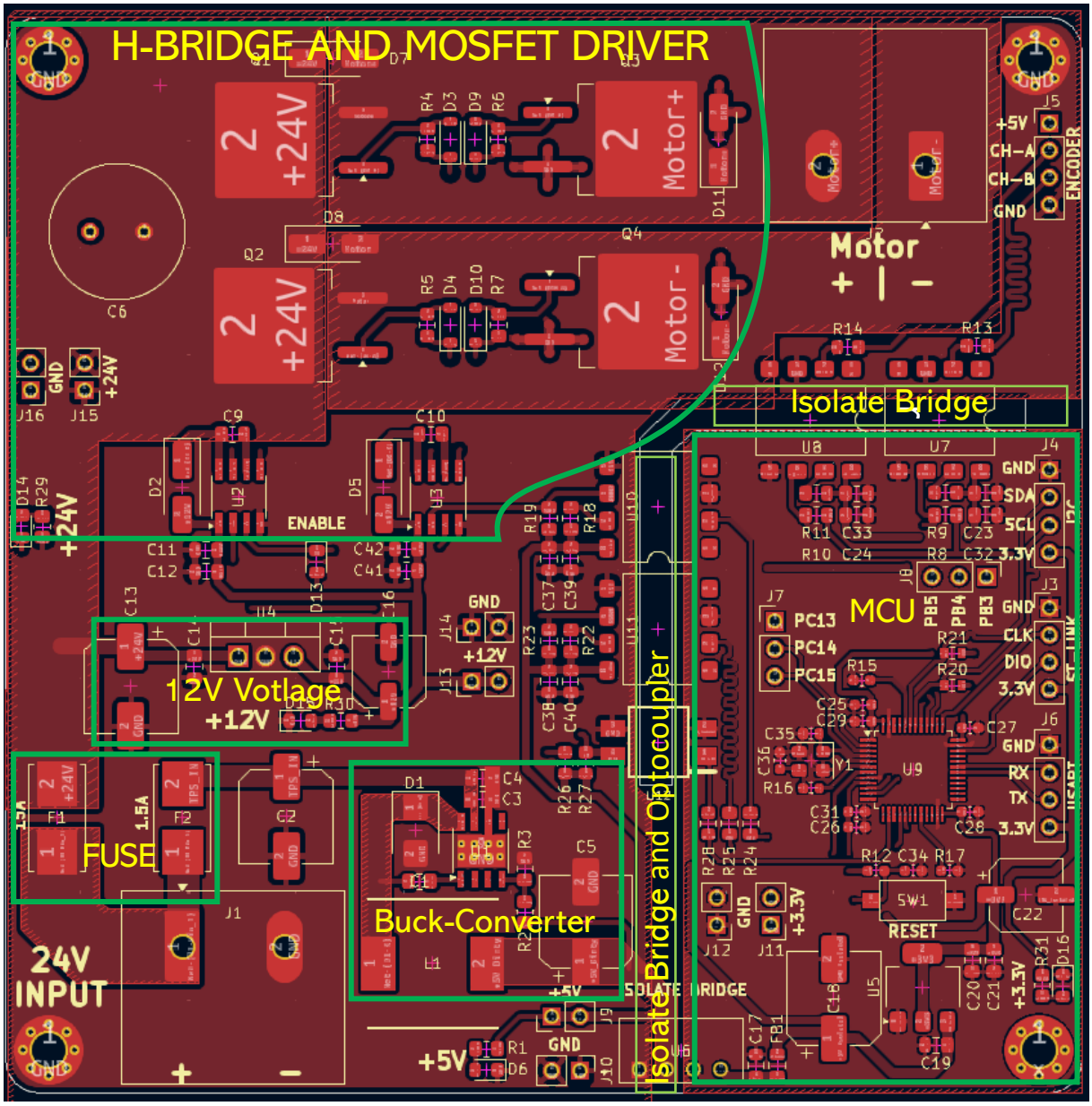

Figure 3.5.6: The physical layout of the control board, highlighted the strategic placement and the clear isolation barrier desgined to safeguard to MCU logic.

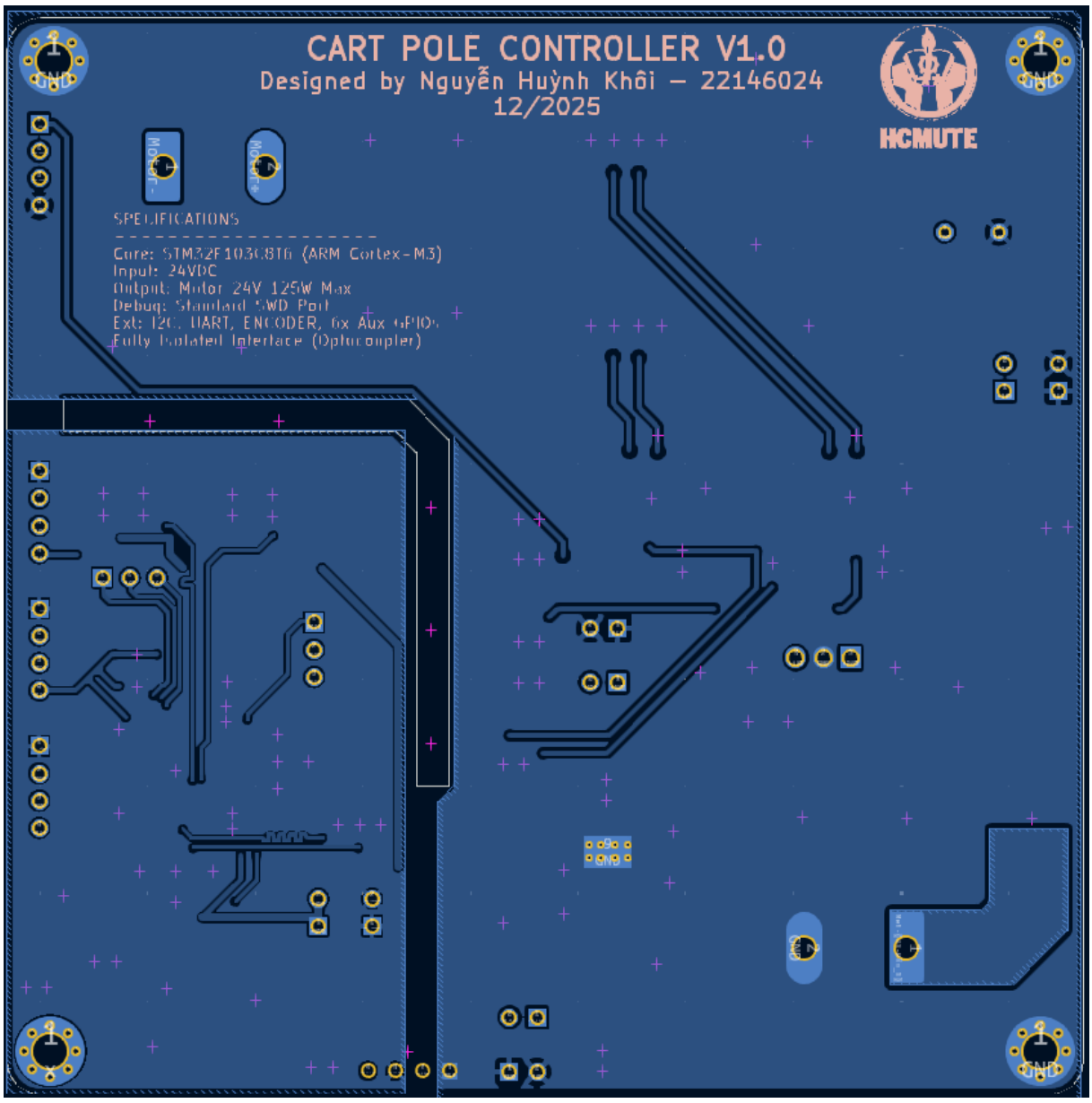

Figure 3.5.7: Back view of cooper traces and pads

CHAPTER IV: SOFTWARE DEVELOPMENT

4.1. Control Flowchart

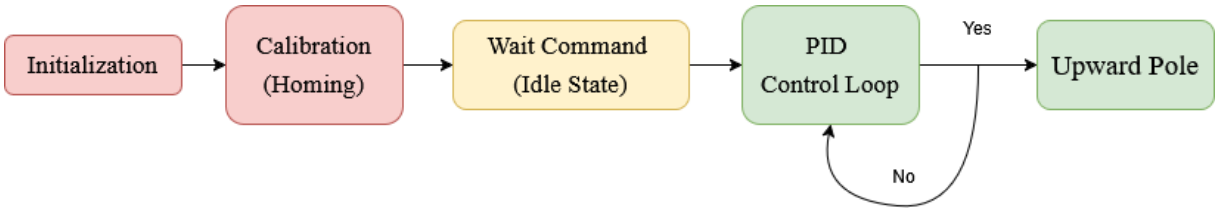

Figure 4.1:Flowchart of Control Program

The software is designed to ensure a safe and predictable transition from power-on to active balancing. The main execution flow consists of the following stages:

- Initialization: Upon reset, the MCU configures the system clock to 72MHz and initializes all necessary peripherals, including GPIOs, Timers (PWM and Encoder), I2C for the gyroscope, and USART for data logging.
- Calibration (Homing): The system performs a self-calibration routine to define the "Zero" position of the cart and the absolute vertical angle of the pole. This step is critical to eliminate mechanical offsets before the control loop engages.
- Wait Command (Idle State): The system enters a standby mode, monitoring safety conditions and waiting for an enable signal (via a physical switch or software command) to start the balancing process.
- PID Control Loop: Once enabled, the system enters a high-priority periodic loop. It reads sensor data, computes the control output using the cascaded PID algorithm, and updates the PWM duty cycle every 10ms.

4.2. STM32 Peripheral Configuration

4.2.1. Timer Encoder Mode

Instead of using software-based interrupts, the system utilizes TIM2 or TIM3 in hardware Encoder Mode. It automatically decodes the quadrature signals (Phase A and Phase B) from the encoder via pins PA0 and PA1. If the hardware counters increment or decrement automatically based on the direction of rotation, providing instantaneous and noise-resilient position and velocity data.

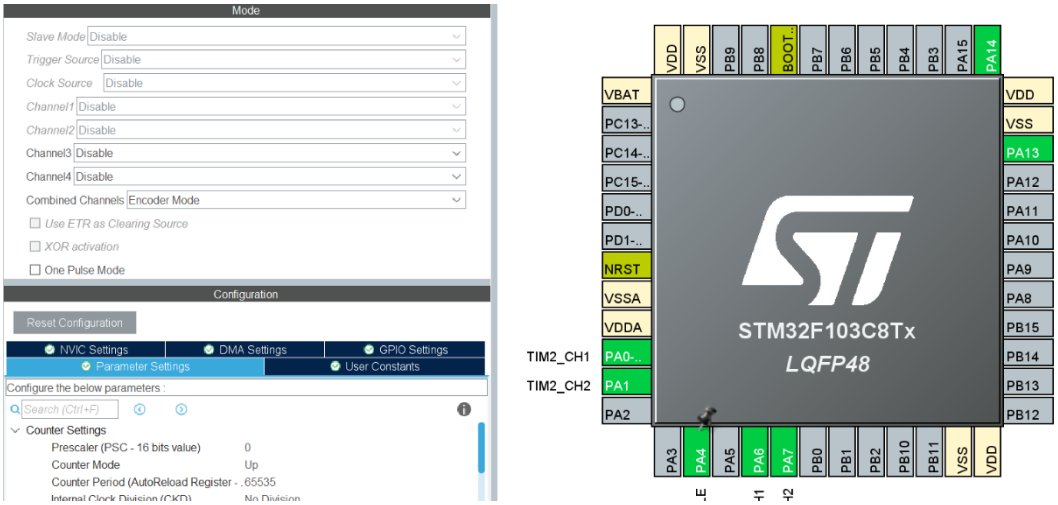

Figure 4.2:TIM_2 Config for Encoder Mode

4.2.2. Timer PWM Generation

The PWM signals are generated using TIM3 (Advanced Control Timer) to drive the H-Bridge through pins PA6 and PA7.Frequency set at 20kHz to ensure smooth motor operation and eliminate audible high-frequency noise. We have formula to calculate PWM frequency as:

$$f_{PWM} = \frac{f_{CLK}}{(PSC + 1) \times (ARR + 1)}$$

Set duty cycle is adjusted between 0% and 100% to regulate the average voltage delivered to the DC motor, effectively controlling torque and speed. Clock of micocontroller is 72MHz, we have:

$$f_{PWM} = \frac{72.000.000}{(35 + 1) \times (99 + 1)} = 20.000\ Hz$$

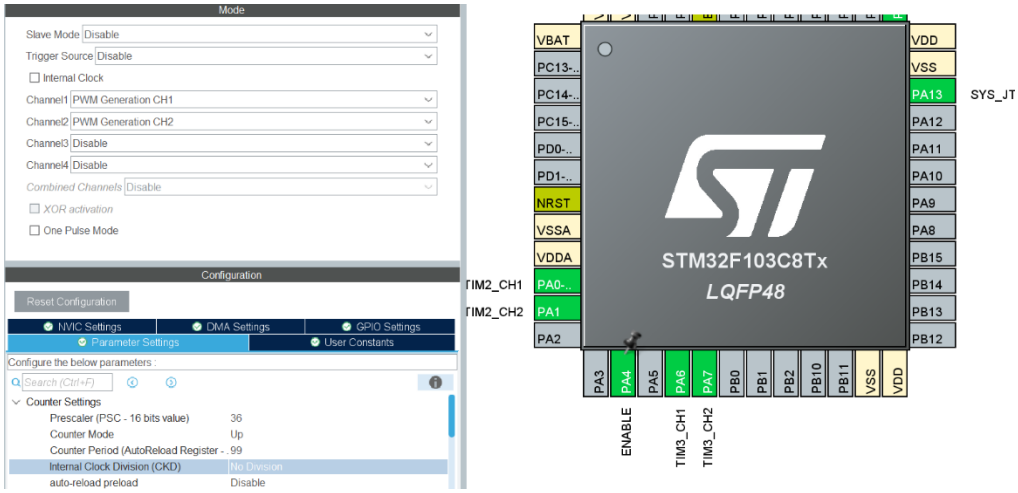

Figure 4.3: TIM_3 Config for PWM Generation

4.2.3. Timer Interrupt (10ms Periodic Task)

The stability of a PID controller depends heavily on a constant sampling rate (T_s). Timer 4 is configured to trigger an Interrupt Service Routine (ISR) every 10ms (100Hz). To achieve 10ms, we got similar formula:

$$T_{interrupt} = \frac{(PSC + 1) \times (ARR + 1)}{f_{CLK}}$$

With $f_{CLK} = 72.000.000$ Hz and $T_{interrupt} = 0{,}01\ s$:

$$0{,}01 = \frac{(PSC + 1) \times (ARR + 1)}{72.000.000} => \ PSC = 7199 \text{ and ARR} = 99$$

Figure 4.4:TIM_4 for Interrupt

Inside the interrupt, the MCU performs task including: Reads the tilt angle (θ) from the Gyroscope via I2C. Reads the cart position (x) from the Encoder counter. Executes the Cascaded PID calculations. Updates the PWM registers for immediate motor response.

4.3. Controller Programming

The transition from the continuous mathematical PID formula to discrete C code is achieved through discretization. We have continuous PID Formula:

$$u(t) = K_p e(t) + K_i \int e(t)dt + K_d \frac{de(t)}{dt}$$

Discrete C-Code Implementation:

- **Proportional Term (P):** Reacts to the current error. p_term = Kp * error;
- **Integral Term (I):** Accumulates error over time to eliminate steady-state offset. Anti-windup logic is applied to saturate this term. i_term += Ki * error * Ts;
- **Derivative Term (D):** Predicts future error by measuring the rate of change, helping to dampen oscillations. d_term = Kd * (error - last_error) / Ts;
- **Total Output:** control_output = p_term + i_term + d_term; last_error = error;

CHAPTER V: RESULTS AND EVALUATION

5.1. Hardware Assembly and Power-on Self-Test

After completing the soldering of all surface-mount and through-hole components, the board was visually inspected for solder bridges and cold joints. The initial power-on test was performed hierarchically to verify the integrity of the power management unit. Measurements taken using a digital multimeter confirmed that the hierarchical power strategy is functioning correctly. All four required voltage rails are present and stable are 24V DC fron main input from the power supply. 12V DC regulated by the L7812. 5V DC stepped down by the TPS5430 buck converter. 3.3V DC provided by the isolated B0505S and AMS1117.

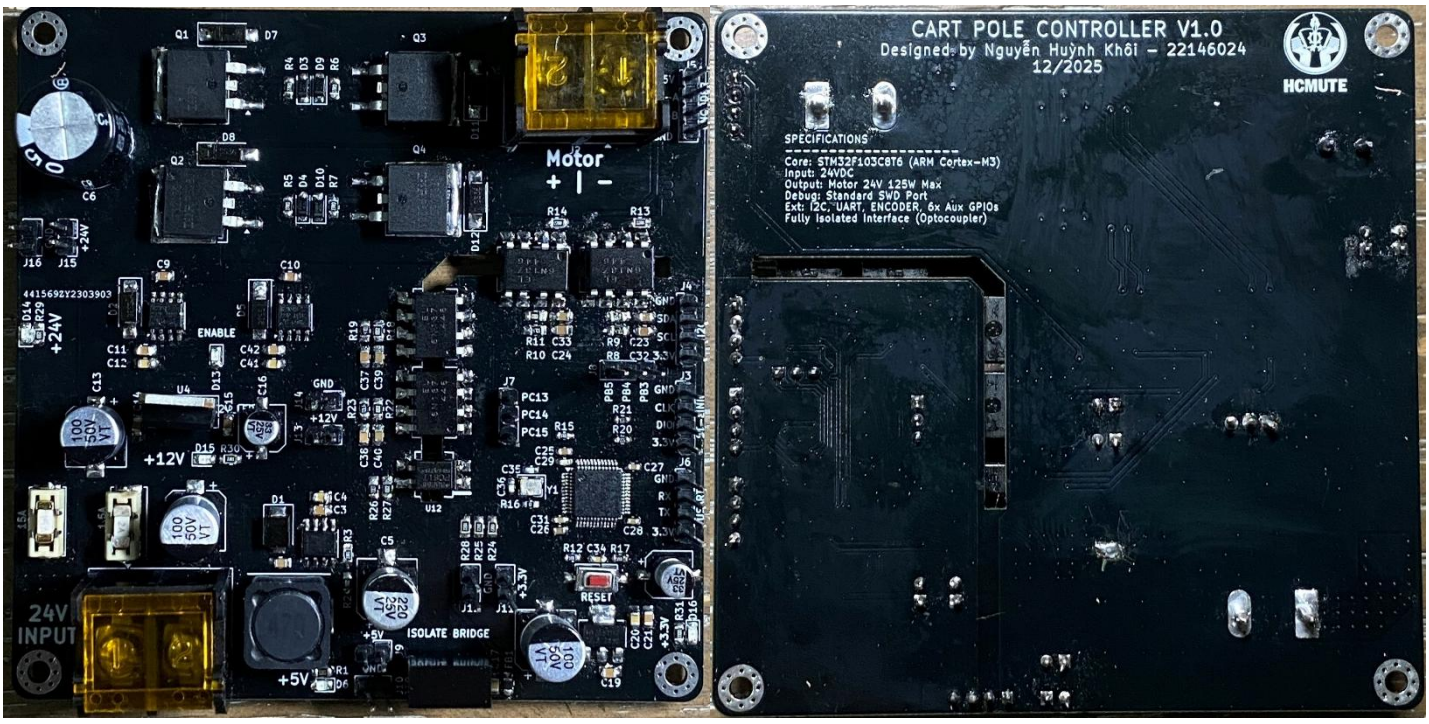

Figure 5.1: PCB Control Interface Board for Cart Pole System

5.2. Individual Functional Verification

Once the power rails were verified, each peripheral was tested individually using dedicated firmware routines to ensure the STM32F103C8T6 could interact correctly with the external hardware. The Serial Wire Debug (SWD) interface was successfully validated using an ST-LINK V2 debugger. The STM32CubeIDE correctly identified the STM32F103C8T6 core, confirming the integrity of the power supply, the 8MHz crystal circuit, and the signal traces on pins PA13 (SWDIO) and PA14 (SWCLK). Firmware

flashing was performed without errors, and the real-time debugging capability was fully functional. The hardware timer in Encoder Mode successfully captured pulses from the quadrature encoder. By rotating the motor shaft manually, the MCU correctly incremented and decremented the position counter, confirming the integrity of the 6N137 high-speed isolation path. The gyroscope was successfully detected on the I2C bus. Raw data for the tilt angle (θ) and angular velocity were successfully retrieved, confirming the correct implementation of the 4.7k Ω pull-up resistors and signal levels. Real-time data was successfully transmitted to a PC via the USART1 interface. This confirms that the system is ready for real-time PID tuning and telemetry. The TIM1 peripheral successfully outputted complementary PWM signals. Using an oscilloscope, the signals were observed at the input of the IR2104 drivers after passing through the 6N137 optocouplers.

5.3. Technical Challenges and Failure Analysis

During the system integration phase, while the individual components operated correctly, a hardware failure occurred in the H-bridge power stage during a test. This section analyzes the failure and provides insights for future hardware iterations.

5.3.1. Incident Description

During the functional testing phase, specifically while applying the PWM signals to the input pins of the IR2104 gate drivers to verify motor actuation, a critical hardware failure occurred. While the system was powered, the 24V supply LED was observed flashing continuously - indicating a severe voltage drop or a rapid oscillating short-circuit condition. Immediately following this instability, the main fuse ruptured, successfully isolating the power source. However, a subsequent diagnostic of the board revealed extensive damage to the power stage. Two out of the four IRF3205S transistors suffered a permanent drain-to-source short circuit. All four SS36 freewheeling diodes were destroyed, likely due to exceeding their peak forward current ratings during the failure. Both IR2104 integrated circuits became non-functional, potentially due to high-voltage feedback from the MOSFET gates during the breakdown. This failure resulted in the complete loss of the H-bridge's drive capability, preventing further real-time testing on the H-Bridge.

5.3.2. Root Cause Analysis

After a thorough post-failure inspection of the PCB layout and physical connections, a fundamental assembly oversight was identified as the primary cause of the H-bridge breakdown. The failure originated from a missing connection between the VS pin (Pin 6) of the IR2104 gate drivers and the source terminals of the high-side MOSFETs (Q1 and Q3). The technical consequences of this missing connection are Floating high-side reference, it mean that the VS pin serves as the floating return path for the high-side gate drive. Without this connection, the bootstrap capacitor cannot discharge correctly into the gate-source junction of the high-side MOSFET. This leaves the gate in an undefined, "floating" state, susceptible to noise and unintentional activation. Due to the lack of a proper reference, the high-side MOSFET likely remained partially or fully active at the same time the low-side MOSFET was triggered. This created a direct short-circuit path from the 24V rail to Ground through the bridge branch. This catastrophic current surge is what caused the rapid flickering of the supply LEDs and the immediate rupture of the 15A protection fuse. This hardware failure serves as a critical lesson in the importance of meticulous verification of high-side driver return paths in power electronics design.

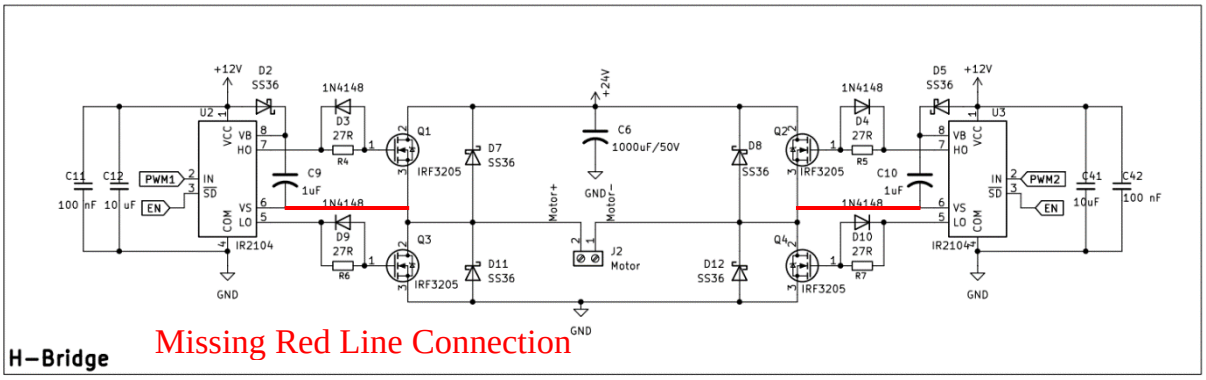

Figure 5.2: Root Cause Short Circuit

CHAPTER VI: CONCLUSION

6.1. Conclusion

This project successfully established the foundational hardware and software framework for a self-balancing Cart-Pole system powered by a 150W motor. Throughout the development process, several key objectives were achieved: A robust control board was designed and prototyped, featuring a hierarchical power system (24V, 12V, 5V, 3.3V) and a dual-layer isolation strategy using 6N137 and PC817 optocouplers to safeguard the STM32 logic. The firmware effectively utilized the STM32's hardware peripherals, including Timer Encoder Mode for precise position feedback, PWM generation for motor control, and I2C communication for gyroscope data acquisition. Individual sub-systems, including the power management unit, sensor interfaces, and the SWD programming interface, were fully validated as functional. Although a critical failure in the H-bridge power stage prevented the final physical balancing demonstration, the incident provided a valuable opportunity for forensic engineering. Identifying the most probable causes - such as EMI-induced shoot-through and inductive back-EMF spikes - provided a deep understanding of high-power switching challenges. While the project did not reach the final stage of long-term autonomous balancing, the successful design of the complex 150W electronic platform and the implementation of the cascaded PID logic constitute a significant milestone in mechatronics engineering.

6.2. Future Work

To evolve this project into a more reliable and advanced control platform, the following developments are proposed: Fristly, repair the H-Bridge of the board and make sure every components workable, then test one by one side of Half Bridge to re-check if every correct. If the board funcional, applying the PID Loop is necessary and run it on the hardware model to make sure PID is working. Tuning the PID is the next step to achieve the fully funcional control board. After everything done, apply more advanced control strategies such as Linear Quadratic Regulator (LQR), Fuzzy Logic Control to improving program skill is considerable.

CITIATION

[1] **Ogata, K. (2010).** *Modern Control Engineering*. 5th Ed. Prentice Hall.

[2]**Nise, N. S. (2015).** *Control Systems Engineering*. 7th Ed. John Wiley & Sons.

[3]**Visioli, A. (2006).** *Practical PID Control*. Springer.

[4] **V. L. Chương**, " MODEL 3. VELOCITY CONTROL FOR DC SERVO MOTORS" Lecture Notes, Faculty of Mechanical Engineering, Ho Chi Minh City University of Technology and Engineering.

[5] **V. L. Chương**, " MODEL 4. POSITION CONTROL FOR DC SERVO MOTORS" Lecture Notes, Faculty of Mechanical Engineering, Ho Chi Minh City University of Technology and Engineering.

[6] **MathWorks**, "Designing Cascade Control System with PI Controllers," *MathWorks Help Center*. [Online]. Available:

https://www.mathworks.com/help/control/ug/designing-cascade-control-system-with-pi-controllers.html.